08, 09, 10 e 11 de novembro de 2022
ISSN 2177-3866

How do virtues, citizenship and practices relate in the context of strategic human resources management in the public organizations? Testing of a structural model

ANA CAROLINA REZENDE COSTA
UNIVERSIDADE DE BRASÍLIA (UNB)

KARLA VELOSO COURA
UNIVERSIDADE DE BRASÍLIA (UNB)

How do virtues, citizenship and practices relate in the context of strategic human resources management in the public organizations? Testing of a structural model

1. INTRODUCTION

The organizational environment permeated by challenges and uncertainties (Al-Kahtani, 2018), as well as changes in the labor market require the employee to be dynamic and flexible (Ribeiro, Mattos, Antonelli, Canêo, & Goulart, 2011). With this, researchers and managers are challenged to broaden the understanding of human behavior and social interactions that occur in the work context (Estivalete, Costa, & Andrade, 2014), since people represent essential competencies of organizational strategic differentiation (Nusrat, 2018).

In this way, researchers should expand their investigations in fields that represent significant purposes and ennobling qualities (Cameron, Bright, & Caza, 2004), in promoting healthier work environments (Salanova, Llorens, & Martínez, 2016), to increase the level of performance and innovation of employees, without compromising their well-being at work (Magnier-Watanabe, Uchida, Orsini, & Benton, 2020). As organizational results, in the private sphere, profitability and competitiveness are emphasized. In the public context, in which society and citizens are customers, the focus is on productivity, quality in the provision of services, optimization of resources, speed in service and the incentive to citizenship (Medeiros & Demo, 2021).

The theoretical movement of Positive Organizational Studies has gained prominence in the last decade as a research chain based on improving organizations, using their internal forces (Cunha, Rego, & Lopes, 2013). In this sense, some studies have developed theories about the relevance of organizational virtuosity, referring to organizational environments where virtues, such as trust, integrity and forgiveness, are supported, practiced, disseminated, and preserved, both individually and collectively (Cameron, Dutton, & Quinn, 2003). The virtues are necessary for the organization to engage in excellence practices (Moore & Beadle, 2006), since they support the organizational environment and can be incorporated into the management decision-making models (Crossan, Mazutis, & Seijts, 2013).

Another factor that plays a vital role in promoting positive attitudes and affects the level of engagement and motivation of the employees are the human resource management practices (Aktar & Pangil, 2018). Human Resources Management (HRM) practices are important when aligned with the organization's goals in a way that promotes conditions for which employees contribute effectively to achieving superior results (Armstrong, 2017; Legge, 2006).

Moreover, the researchers have considered, in obtaining better results, the importance of behaviors not prescribed by the formal system, such as organizational citizenship behaviors (Janssen & Huang, 2008). Organizational citizenship behaviors (OCB) can be described as acts of social exchange, offered voluntarily by employees to organizations (Siqueira, 1995). In this perspective, when the employee feels valued and respected in the organization in which he/she works, he/she feels more willing to invest his/her time and energy for the benefit of the organization beyond its legal obligations, involving itself in OCBs (Ahmad, Donia, Khan, & Waris, 2019).

In this scenario, considering the scientific evidence, the relevance of organizational virtues, human resource management practices, and organizational citizenship behaviors for the healthy and effective performance of organizations, as well as the gap identified in the literature regarding the investigation of more complex structural models, involving HRM practices (Demo, Fogaça, & Costa, 2018), the objective of this study was to identify the relationship between organizational virtues, human resource management practices, and organizational citizenship behaviors, from the conceptual framework of strategic human resources

management, in the context of public organizations. Therefore, from the literature covered, five research hypotheses were developed to be tested in the structural model.

2. THEORETICAL FRAMEWORK AND HYPOTHESES

Virtudes refer to habits, desires and actions that lead to a personal and social good (Cameron et al., 2003), in addition to contributing with damper effects in the face of organizational traum, because they prevent behaviors and negative effects, allowing organizations to face difficulties and crises more effectively (Cunha et al., 2013), such as the newly experienced crisis caused by the new coronavirus, which changes have occurred or are taking place in the way organizations operate and work is carried out (Cooke, Dickmann, & Parry, 2020). Peterson and Park (2006) define organizational virtues as moral characteristics of the organization as a whole and as a permanent part of organizational culture. This concept was adopted in the present study.

The strategic human resources management (SHRM), a conceptual framework of this research, can be understood as the rethinking of HRM strategies, policies and practices, integrated into organizational objectives, in order to leverage results at the individual, group and organizational levels, taking into account the environmental variables and the multiple actors involved (Buren, Greenwood, & Sheehan, 2011; Cascio, 2015; Lengnick-Hall, Beck, & Lengnick-Hall, 2011). For the present study, HRM practices are understood as articulated proposals of the organization regarding human relations, with the objective of achieving the desired results (Demo, Nunes, Mendes, Ferreira, & Melo, 2011).

Organ (1988) introduced the original concept of OCB, relating it to discretionary individual behaviors that promote the effective functioning of the organization. More recently, Organ (2018) stated that OCB represent formal ways of cooperating and contributions that individuals make in the light of job satisfaction and perception of justice. In the present study, we chose to use the conceptual framework of Bastos, Siqueira and Gomes (2014), which define OCB as acts of social exchange that workers voluntarily offered to organizations.

In view of this, the possibilities of relationship between each pair of variables of this research and the three variables together will be analyzed, formalizing the hypotheses that were tested in a structural model of prediction.

2.1 Organizational Virtues and Human Resources Management Practices

As for the relationships between organizational virtues and human resource management practices, studies indicate the possibility of positive associations between the two variables (Hamrahi, Najlfbagy, Musakhani, Daneshfard, & Delavar, 2015; Malik & Naeem, 2016). For Luo and Chen (2010), organizational virtues are a mechanism through which human resource management practices lead to higher levels of positive behaviors in the workplace. In addition, virtues constitute the core of organizational culture (Hofstede, 2001) and influence the perception of organizational practices, including HRM practices, confirming what has already been demonstrated by Demo (2010) and Rodriguez and Gomez (2009), by affirming that the elements that lead to corporate culture influence how GP practices are designed and implemented.

It is also noteworthy the need to investigate antecedents of HRM practices, since the variable is traditionally investigated as independent variable (Demo, Costa, Coura, Miyasaki, & Fogaça, 2020). Thus, the authors believe that the test of variables of positive psychology as predictors of HRM practices would strengthen the line of studies of these antecedents, especially with regard to elements of organizational culture, such as virtues.

Thus, the first hypothesis of this research is proposed:

Hypothesis 1 (H1): Organizational virtues are positively related to human resource management practices.

2.2 Human Resource Management Practices and Organizational Citizenship Behaviors

There is evidence that the more employee perceives organizational practices in order to value, involve and recognize him/her, indicating the care and concern of the organization with his/her well-being, the more he/she will feel satisfied and affectively connected to the work, the greater his/her cooperation with other organization members and his/her propensity to present organizational citizenship behaviors (Muhammad, 2014; Pires & Nunes, 2018).

In this vein, it is clear that the behaviors beyond contractual obligations are strongly dependent on HRM practices related to the organization's concern for employee well-being (Tinti, Venelli-Costa, Vieira, & Cappellozza, 2017). Processes such as employee selection, reward management systems, training and development, career management, performance management and internal promotions, elements characterized as HRM practices (Armstrong, 2017; Boon, Den Hartog, & Lepak, 2019; Demo, Neiva, Nunes, & Rozzett, 2014) encourage the manifestation of organizational citizenship behaviors (Becton, Giles, & Schraeder, 2008). Thus, HRM practices promote benefits for both the organization and its workforce, because when organizations are willing to offer programs that manage and develop their workforce, organizational citizenship behaviors are exhibited (Lockhart, Shahani, & Bhanugopan, 2020).

Therefore, it is proposed that:

Hypothesis 2 (H2): Human resource management practices are positively related to organizational citizenship behaviors.

2.3 Organizational Virtues and Organizational Citizenship Behaviors

Empirical studies demonstrate a possibility of association between organizational virtues and organizational citizenship behaviors. Ribeiro and Rego (2009; 2010) showed how the perception of organizational virtues can explain OCBs. Other authors investigated the effects of organizational virtues on OCBs mediated by job satisfaction (Kooshki & Zeinabadi, 2016) and by the perception of organizational support (Malik & Naeem, 2016).

Higher levels of organizational virtues generate positive emotions and willingness to act positively for the benefit of the organization, resulting in an affective commitment and citizenship behaviors (Pires & Nunes, 2018). Thus, they realize that the perception of organizational virtues on the part of individuals can lead to the emergence of extra-role behaviors, increasing individual and organizational well-being, besides promoting greater engagement in work (Singh et al., 2018). In this sense, improving employees' perception of organizational virtues could be a way to increase organizational citizenship behaviors (Sun & Yoon, 2020).

Thus, the third hypothesis of the research is based:

Hypothesis 3 (H3): Organizational virtues are positively related to organizational citizenship behaviors.

2.4 Organizational Virtues, Human Resource Management Practices and Organizational Citizenship Behaviors

In addition to the hypotheses tested among each pair of variables, a contribution of this study lies in the test of the mediation model between organizational behavior variables that can increase the effectiveness of human resource management, as suggested by Armstrong (2017). A broader understanding of the scope of elements of organizational culture, in which virtues fit

together, is vital to design HRM practices that encourage high levels of OCBs (Lockhart et al., 2020). Moreover, the virtues in organizations lead to the development of positive behaviors that, in turn, broaden the thoughts of employees and result in organizational improvements (Fredrickson, 2001).

These improvements, when it comes to public organizations, include sustainable economic growth, progress and innovation, absence of corruption, as well as development and employee well-being (Van der Wal, 2016). In view of this, the present study was conducted in two public institutions, given that most studies focus on private organizations, neglecting public sector organizations, which play an equally crucial role in the economy (Al Damoe, Hamid, & Sharif, 2017; Costa, Demo, & Paschoal, 2019).

Therefore, in order to recognize the strategic role of HRM in organizations, it is encouraged to conduct studies that identify the variables that precede and affect HRM practices so that it is possible to progress in the advancement of the lines of research in HRM (Bianchi, Quishida, & Foroni, 2017; Boon et al., 2019). Therefore, testing of relational models that investigate mediation relationships, especially those related to HRM practices, are fundamental (Demo et al., 2018), ratifying the opportunity of this research proposal.

Thus, the guidelines for the fourth hypothesis to be tested are presented:

Hypothesis 4 (H4): There is a possibility of mediation between the variables organizational virtues, human resource management practices and organizational citizenship behaviors.

2.5 HRM practices are better predictors of OCB factors than OV factors

The human resources management practices are used by routines or actions that enable the achievement of the organization's objectives (Demo, 2016). Organizational practices, which HRM practices are inserted, can also operate through internal social structures in order to increase flexibility and efficiency (Evans & Davis, 2005).

The employee behavior in this process is fundamental, as it has a direct influence on both their individual productivity and group productivity and, consequently, to organization (Tinti et al., 2017). This behavior is characterized by several actions, among them, those considered spontaneous, which are beneficial to the organization and are not included in the formal position requirements, nor are they pass able rewards or formal punishments, which are the so-called of organizational citizenship behaviors (Siqueira, 2003). Thus, organizational citizenship behaviors are subject to HRM practices, especially those that aim to promote the employee well-being (Tinti et al., 2017).

There is several empirical evidences that associate HRM practices with organizational citizenship behaviors. To cite some examples, Snape and Redman (2010) concluded that when employees realize how much the organization's support goes beyond the work done, HRM practices positively affect organizational citizenship behaviors. In the study by Lam, Chen and Takeuchi (2009), the human resource management practices related to training, development and involvement, the latter also called relationship, were the ones that caused the greatest impact on organizational citizenship behaviors. Thus, it can be conjectured that when organizations strive to elaborate and communicate HRM practices, based on a prior survey of specific needs, organizational citizenship behaviors are exhibited (Lockhart et al., 2020).

Although organizational virtues have also been tested in recent studies, there are still more confirmation, as predictors of organizational citizenship behaviors (Malik & Naeem, 2016; Pires & Nunes, 2018; Sun & Yoon, 2020), there is an expressively larger amount of studies suggesting the prediction of human resources management practices on organizational citizenship behaviors (Husin, Chelladurai, & Musa, 2012; Jain & Jain, 2014; Lam, Chen, & Takeuchi, 2009; Lockhart et al., 2020; Snape & Redman, 2010; Tang & Tang, 2012; Tinti et

al., 2017), which allows us to assume that HRM practices are better predictors of organizational citizenship behaviors than virtues.

It is therefore proposed that:

Hypothesis 5 (H5): HRM practices are better predictors of OCB factors than OV factors.

3. METHOD

In order to achieve the proposed objective, the research is characterized as descriptive and explanatory, carried out through a *survey,* with quantitative nature and cross-sectional time frame (Hair, Babin, Anderson, & Black, 2018; Malhotra, 2012). Regarding the model, the analysis of the relationships between the variables and their factors considered as predictors or independent the organizational virtues (OV) and the human resource management practices (HRMP), and organizational citizenship behaviors (OCB) as a criteria or dependent variable.

Regarding the definition of the population and the sample, the population of this study were servants of two public institutions located in the Federal District. The sample was characterized as non-probabilistic for convenience and the data collection was performed by sending the online questionnaire*,* through the *Google Docs* platform*.* As for the sample size for structural model tests, Cohen (1992) advocates a minimum sample that has statistical power greater than 0.80, in the case of comportamental sciences. Thus, using *the G-Power 3.1 software* and considering the predictor variables (OV and HRMP), with a total of 6 factors, a sample of 160 subjects was obtained, for a statistical power of 0.95.

In addition, for the structural model test, path analysis was used, or regression analysis, through structural equation modeling (SEM), the mean sample between 100 and 200 subjects is the minimum recommended for models with few variables (Kline, 2015). Thus, the SEM was used to verify the adjustment of the proposed structural model, using Amos program, which is associated with the SPSS software. Thus, considering eventuais losses in the data processing process, 246 questionnaires were obtained for the two organizations surveyed.

The collected data were transferred to the Statistical Package for the Social Sciences (SPSS) software to analyses. At first, data were processed by means of frequency distribution analysis. Then, the listwise procedure was performed to identify missing values, which eliminated 20 questionnaires. For the verification of outliers, Mahalanobis distance was used (Tabachnick & Fidell, 2013). Thus, 32 questionnaires were eliminated and the final sample had 194 subjects, still above the minimum recommended by Kline (2015).

For the sample studied, no singularity and multilinearity problems were found (Myers, 1990). In addition, all the assumptions for the use of multivariate analysis were confirmed (Field, 2018; Hair et al., 2018). The analysis of univariate and multivariate normality was also examined in the Amos *software* and showed no problems (Marôco, 2010).

Regarding the characterization of the sample, it was finally composed of 194 subjects from the two public institutions. Regarding the demographic-functional profile, the following participants stood out: female (51%); age between 25 and 34 years (36%); and length of service between 1 and 5 years in the institution (37%).

The research instrument, questionnaire, was composed of three scientifically validated measurement scales, namely: Organizational Moral Virtues Perception Scale – OMVPS (Gomide, Vieira, & Oliveira, 2016), 2 factors, with Cronbach's Alfas of 0.95 and 0.92; the Public Human Resource Management Practices Scale – Public HRMPS (Costa, 2021), 4 factors, with Joreskog's Rhos of 0.81, 0.90, 0.79 and 0.76; and Organizational Citizenship Behavior Scale – OCBS (Bastos, Siqueira, & Gomes, 2014), 3 factors, with Cronbach's Alfas of 0.90 and 0.77. These scales were chosen because they are the most recent in the scientific literature, presenting reliable psychometric indexes.

Regarding the procedures for data collection and ethical considerations of the research, in order to minimize the common bias of the method, a two-stroke collection was performed, a strong recommendation of the researchers in the area (Boon et al., 2019). Organizational virtues and human resources management practices variables were collected in the first stage of the research. After 15 days, organizational citizenship behaviors variable was collected, as well as demographic variables. Another reason why the data were collected in two stages not very distant in time is because that the respondents do not forget the first step without, however, the answers to the first stage (VIs) influence the answers to the second stage (VD) (Podsakoff, Mackenzie, & Podsakoff, 2012).

In addition, although participants are the source of information for the independent and dependent variables, configuring the self-report, the use of different anchors in the scales (in this case, agreement for OV and HRMP, and frequency for OCB) also minimized the possibility of common method bias (Podsakoff et al., 2012).

It is noteworthy that, according to the Single Paragraph of Article 1 of Resolution No. 510/16 of the National Health Council (CNS), consultative research, with the confidentiality of the guaranteed answers, as this research, are exempted from ethical analysis by the Research Ethics Committees and the National Research Ethics Commission. However, it is noteworthy that the researched organizations formally authorized this study.

Regarding the procedures of data analysis, to specify and estimate the models of linear relationships between variables, path analysis was used, through structural equation modeling and maximum likelihood test, used for being more robust to violations of normality (Hair et al., 2018; Kline, 2015).

To analyze the adjustment of the theoretical model to empirical data, we chose to analyze the values of the standard χ^2 (CMIN/df, where CMIN is the statistics of χ^2 and DF are the degrees of freedom of the model), the GFI (Goodness of Fit Index), CFI (Comparative Fit Index) and RMSEA (Root Mean Square Error of Approximation), since the CMIN/df and RMSEA are absolute indices and the GFI is an incremental index. We also calculated the standardized root of the mean residue (SRMR), another index of absolute adjustment, which refers to the absolute mean of the residual correlation, that is, the difference between the observed and predicted correlations, being useful to compare adjustments along models.

4. RESULTS

Regarding the relationship proposed in H1 (organizational virtues are positively related to human resource management practices), it appears that the relationship between the variables was in fact positive and significant ($p<0.01$), with β equals 0.976 and R^2 equals 95,2%, resulting in a high correlation (> 0.5) and a great effect, for being greater than 26% (Cohen, 1992). Thus, H1 was confirmed. The H1 adjustment indices (NC=1.56; CFI=0.99; GFI=0.98; RMSEA=0.05; SRMR=0.02) show all values within the parameters of Kline (2015).

As for the relationship proposed in H2 (human resource management practices are positively related to organizational citizenship behaviors), the association between variables was positive and significant ($p <0.01$), with β equals to 0.249 and R^2 equals to 6.2%, showing a weak correlation (<0.3) and a small effect, since it is less than 13% (Cohen, 1992). Thus, it can be said that H2 has been confirmed. All parameters (NC=2.46; CFI=0.95; GFI=0.95; RMSEA=0.09; SRMR=0.08) are considered satisfactory (Kline, 2015).

Following, the relationship proposed in H3 (organizational virtues are positively related to organizational citizenship behaviors) showed a positive and significant association ($p <0.05$), with β equals 0.255 and R^2 equals 6.5%, showing a correlation weak and a small effect (Cohen, 1992). In this way, H3 can be confirmed. All parameters (NC=4.40; CFI=0.95; GFI=0.96; RMSEA=0.13; SRMR=0.07) are considered satisfactory, except for the RMSEA value, which

was just above the recommended. However, it is worth noting that this coefficient is sensitive to more complex models and also increases as the sample grows (Byrne, 2013; Hair et al., 2018).

Following the analysis, H4 (there is a possibility of mediation between the variables OV, HRMP and OCB) was tested. Thus, in accordance with Baron and Kenny (1986), four conditions were tested simultaneously by structural equation modeling: 1) the antecedent variable significantly predicts the mediating variable; 2) the mediator significantly predicts the criteria variable; 3) the antecedent variable significantly predicts the criteria variable; and 4) in the presence of the antecedent variable and the mediator, the relationship previously found to be significant between antecedent and criteria decreases or disappears.

Two possible mediation models were tested. First, the test was carried out using the variable human resource management practices as a mediator of the relationship between organizational virtues and organizational citizenship behavior. This possibility of association was refuted since the assumptions of Baron and Kenny (1986) were not met. In a second step, another possibility of mediation was tested: organizational virtues mediating the relationship between human resource management practices and organizational citizenship behaviors. Again, the conditions recommended by Baron and Kenny (1986) were not met. Therefore, H4 was rejected. Table 1 presents the results of this analysis.

Table 1
Testing of mediation possibilities (H4)

Possibilities	Relations		β	R^2	p-value
First: HRMP as mediator	OV	HRMP	0.976	95.20%	***
	HRMP	OCB	0.249	6.20%	0.010
	OV	OCB	0.255	6.50%	0.023
	OV	OCB	0.771	8.40%	0.439
	HRMP	OCB	0.518		0.603
Second: OV as mediator	HRMP	OV	0.976	95.20%	***
	OV	OCB	0.255	6.50%	0.023
	HRMP	OCB	0.249	6.20%	0.010
	HRMP	OCB	-0.518	8.40%	0.603
	OV	OCB	0.771		0.439

Thus, in order to explore in more detail the possibilities of associations between the variables, which constitutes the main objective of this article, having organizational citizenship behaviors as a dependent variable, we started to analyze individual predictors, through of the factors of the variables, and Hypothesis 5 (H5) was elaborated: the HRM practices are better predictors of the OCB factors than the OV factors. Analyzing the results, it is possible to infer that the practice of TD&E is the best predictor for Creative Suggestions, as well as the practice of Relationship is the best predictor for Dissemination of the Organizational Image, presenting small and medium effects, respectively (Cohen, 1992). It is inferred, therefore, that H5 was confirmed. Figure 1 presents a synthesis of the best predictors for organizational citizenship behavior factors.

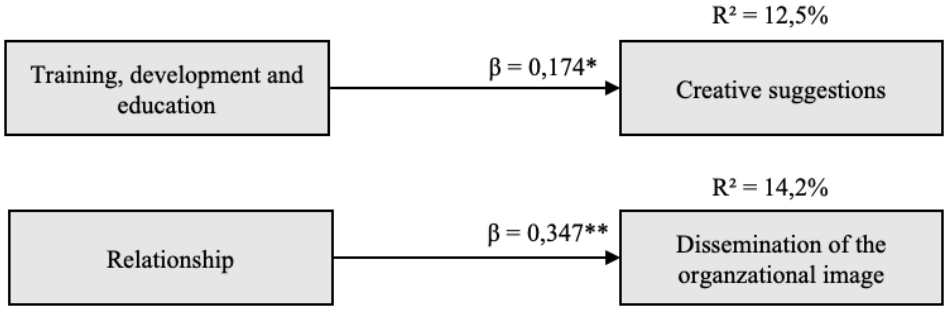

Figure 1. Best predictors
Note: *p-value < 0.05
** p-value < 0.01

5. DISCUSSION, IMPLICATIONS, LIMITATIONS AND AGENDA

The objective of this research was to identify the existing relationship between organizational virtues, human resource management practices and organizational citizenship behaviors, based on the conceptual framework of strategic human resource management, in the context of public organizations, as it was a relationship that has not yet been investigated. in the literature on organizational behavior. Thus, it appears that organizational virtues predict human resource management practices (Hypothesis 1), a relationship that has also been signaled by Hamrahi, Najlfbagy, Musakhani, Daneshfard and Delavar (2015) and Malik and Naeem (2016). The values of β (0.976) and R^2 (95.2%) deserve to be highlighted, which demonstrate an extremely high correlation and effect (Cohen, 1992), making it possible to infer that almost the entire explanation of the perception of the human resources management practices comes from the perception of organizational virtues, which reveals a valuable insight to managers.

It could also be observed that human resources management practices predict organizational citizenship behaviors (Hypothesis 2), an association already confirmed by Tinti et al. (2017), Husin, Chelladurai and Musa (2012), Jain and Jain (2014) and Lockhart, Shahani and Bhanugopan (2020). It is also observed that the organizational virtues predict organizational citizenship behaviors (Hypothesis 3), which has already been confirmed by several studies, which can be cited: Pires and Nunes (2018) and Sun and Yoon (2020).

As for the other analyzes, mediation relations were tested with organizational citizenship behaviors as a dependent variable, and organizational virtues and human resources management practices, sometimes figuring as a dependent variable, sometimes as a mediating variable (Hypothesis 4). However, this hypothesis was refuted, as the assumptions of Baron and Kenny (1986) for a mediation analysis could not be confirmed. Therefore, Hypothesis 5 was proposed, and here lies the main contribution of this article, which has been confirmed: HRM practices are better predictors of OCB factors than OV factors. More specifically, it can be seen that TD&E is the best predictor for Creative Suggestions, as well as Relationship is the best predictor for Dissemination of the Organizational Image.

Therefore, human resource managers must develop, institutionalize and communicate HRM practices, especially those that advocate the valorization, involvement, recognition and well-being of employees, gathered in the practice of Relationship, since they will feel connected emotionally to the work, becoming more likely to present spontaneous actions and not included in the formal requirements of the position (Siqueira, 2003). As a result, the greater the effort of employees to contribute to organizational performance as a whole (Dirks & Ferrin, 2001; Siqueira, 2003). In addition, HRM practices that increase employee skills and efficiency are drivers of more effective organizational management, which can also lead to higher levels of positive behavior in the workplace (Pires & Nunes, 2018; Subramaniam, Shamsudin, & Ibrahim, 2011; Yuvaraj & Mulugeta, 2013). In summary, these behaviors are related to the

employees' perception that the organization cares about them and invests in them (Sylvia, 2014), which encourages the manifestation of desirable organizational citizenship behaviors (Becton et al., 2008).

With regard to theoretical contributions, the research innovates by bringing a model that has not yet been explored in the literature, namely: the joint influence of organizational virtues and human resources management practices on organizational citizenship behaviors, in order to identify the best predictors of factors that compose the OCB construct. Also, the study filled a gap in the literature regarding the lack of studies on positive psychology variables in the context of public organizations, in response to the invitation of Al Damoe, Hamid and Sharif (2017) and Costa, Demo and Paschoal (2019).

As for managerial implications, encouraging the practice of elements of corporate culture, such as organizational virtues, in addition to promoting consistent, integrated and mainly strategic human resources management (Boon et al., 2019; Nusrat, 2018), can encourage employees the emergence of organizational citizenship behaviors, increasing individual and organizational well-being in the long term, as well as promoting greater engagement at work, which will translate into better results, both at the level of the individual, as well as the teams and the organization as a whole (Singh et al., 2018).

When it comes to social implications, it is conjectured that work contexts that envision ennobling purposes, especially in the promotion of healthier work environments, will imply better inter-organizational relationships and a more effective service to society in general.

Finally, the study had some limitations. The first one concerns the impossibility of generalizing the results, since the sample is non-probabilistic. The second is that the cross-sectional design for data collection does not allow causal inferences to be made. Thus, it is suggested to carry out longitudinal studies and in the various spheres and powers of the public sector in order to confirm the results collected for the time being. In addition, multi-method research strategies are also welcome, as they will allow an understanding of the results beyond the numbers that synthesize them.

In this sense, further studies that address the virtues in organizations can also be proposed, as they are still underdeveloped, both theoretically and empirically (Hamrahi et al., 2015). In addition, research that addresses antecedents of HRM practices (Demo et al., 2018) and organizational virtues (Pires & Nunes, 2018) is also necessary. In addition, the results of the present study reinforce the need for further research to identify predictors of OCB, given the weak predictive power of the antecedent variables selected here.

Finally, other structural models of mediation and moderation should be tested, taking into account the gaps in the reviews by Boon et al. (2019) and Demo, Costa, Coura, Miyasaki and Fogaça (2020), which point out the relevance of studies concerning the strategic management of people to move towards the testing of more complex models, covering classic variables in the HRM area, such as the own practices and leadership, as well as variables in the area of positive organizational behavior, such as resilience at work and organizational identity.

6. CONCLUSION

The research achieved its objective to identify the existing relationship between organizational virtues, human resource management practices and organizational citizenship behaviors, and showed that there is a positive association between them, in which human resource management practices are stronger predictors of organizational citizenship behaviors than the virtues in organizations.

The results generated call the attention of public managers to recognize the importance of stimulating the virtues in organizations, considering their notable influence on the perception

of management practices, in order to lead to increasingly higher levels of positive behavior in the workplace, as the organizational citizenship behaviors.

This research represented a seminal step in verifying the joint relationship between these variables, including testing mediation, in order to inspire new investigations bringing together different variables of positive psychology and human resources management, advocating a focus on people's well-being and promoting healthier and more productive work environments, which should be a priority in any organization.

REFERENCES

Ahmad, I., Donia, M. B., Khan, A., & Waris, M. (2019). Do as I say and do as I do? The mediating role of psychological contract fulfillment in the relationship between ethical leadership and employee extra-role performance. *Personnel Review*, *48*(1), 98-117.

Aktar, A., & Pangil, F. (2018). Mediating role of organizational commitment in the relationship between human resource management practices and employee engagement: Does black box stage exist? *International Journal of Sociology and Social Policy*, *38*(7-8), 606-636.

Al Damoe, F. M., Hamid, K., & Sharif, M. (2017). The mediating effect of organizational climate on the relationship between HRM practices and HR outcomes in the Libyan public sector. *Journal of Management Development*, *36*(5), 626-643.

Al-Kahtani, N. (2018). The impact of demographical variables on HRM practices in Saudi Telecom Company: An empirical exploration. *Management Science Letters*, *8*(3), 131-138.

Armstrong, M. (2017). *Armstrong's handbook of human resource management practice* (14a ed.). London: Kogan Page.

Baron, R. M., & Kenny, D. A. (1986). The moderator-mediator variable distinction in social psychological research: Conceptual, strategic, and statistical considerations. *Journal of Personality and Social Psychology*, *51*(6), 1173-1182.

Bastos, A. V. B., Siqueira, M. M. M, & Gomes, A. C. P. (2014). Cidadania Organizacional. In Siqueira, M. M. M. (Org.). *Novas medidas do comportamento organizacional: ferramentas de diagnóstico e de gestão* (pp. 79-103). Porto Alegre: Artmed.

Becton, J. B., Giles, W. F., & Schraeder, M. (2008). Evaluating and rewarding OCBs: potential consequences of formally incorporating organisational citizenship behaviour in performance appraisal and reward systems. *Employee Relations*, *30*(5), 494-514.

Bianchi, E. M. P. G., Quishida, A., & Foroni, P. G. (2017). Atuação do Líder na Gestão Estratégica de Pessoas: Reflexões, Lacunas e Oportunidades. *Revista de Administração Contemporânea*, *21*(1), 41-61.

Boon, C., Den Hartog, D. N., & Lepak, D. P. (2019). A systematic review of human resource management systems and their measurement. *Journal of Management*, *45*(6), 2498-2537.

Buren, H. J. Van, III, Greenwood, M., & Sheehan, C. (2011). Strategic human resource management and the decline of employee focus. *Human Resource Management Review*, *21*(3), 209-219.

Byrne, B. M. (2013). *Structural equation modeling with Mplus: Basic concepts, applications, and programming*. New York, NY: Routledge Taylor and Francis Group.

Cameron, K. S., Bright, D., & Caza, A. (2004). Exploring the relationships between organizational virtuousness and performance. *American Behavioral Scientist*, *47*(6), 766-790.

Cameron, K. S., Dutton, J. E., & Quinn, R. E. (2003). *Positive organizational scholarship: foundations of a new discipline*. San Francisco: Berret-Koelher.

Cascio, W. F. (2015). Strategic HRM: too important for an insular approach. *Human Resource Management*, *54*(3), 423-426.

Cohen, J. (1992). A Power Primer. *Psychological Bulletin*, *112*(1), 155-159.

Cooke, F. L., Dickmann, M., & Parry, E. (2020). IJHRM after 30 years: taking stock in times of COVID-19 and looking towards the future of HR research. *The International Journal of Human Resource Management*, *31*(1), 1-23.

Costa, A. C. R. (2021). *Como virtudes, cidadania e práticas se relacionam no contexto da gestão estratégica de pessoas no setor público? Teste de um modelo estrutural*. Tese de Doutorado. Universidade de Brasília, Brasília, DF, Brasil.

Costa, A. C., Demo, G., & Paschoal, T. (2019). Do human resources policies and practices produce resilient public servants? Evidence of the validity of a structural model and measurement models. *Revista Brasileira de Gestão de Negócios*, *21*(1), 70-85.

Crossan, M., Mazutis, D., & Seijts, G. (2013). In search of virtue: The role of virtues, values and character strengths in ethical decision making. *Journal of Business Ethics*, *113*(4), 567-581.

Cunha, M. P., Rego, A., & Lopes, M. P. (2013). Comportamento organizacional positivo. *Análise Psicológica*, *4*(31), 313-328.

Demo, G. (2010). *Gestão de Pessoas nas Organizações: o papel dos valores pessoais e da justiça organizacional* (3a ed.). São Paulo: Atlas.

Demo, G. (2016). Políticas e Práticas de Gestão de Pessoas: possibilidades de diagnóstico para gestão organizacional. In Mendonça, H., Ferreira, M. C., & Neiva, E. R. (Eds.). *Análise e Diagnóstico Organizacional: teoria e prática* (pp. 117-148). São Paulo: Vetor.

Demo, G., Costa, A. C., Coura, K., Miyasaki, A. C., & Fogaça, N. (2020). What do scientific research say about the effectiveness of human resource management practice? Current itineraries and new possibilities. *Revista de Administração da UNIMEP, 18*(3), 138-158.

Demo, G., Fogaça, N., & Costa, A. C. (2018). Políticas e práticas de gestão de pessoas nas organizações: cenário da produção nacional de primeira linha e agenda de pesquisa. *Cadernos EBAPE. BR*, *16*(2), 250-263.

Demo, G., Neiva, E. R., Nunes, I., & Rozzett, K. (2014). Políticas e práticas de recursos humanos. In Siqueira, M. M. M. (Org.), *Novas Medidas do Comportamento Organizacional: Ferramentas de Diagnóstico e de Gestão* (pp. 240-245). Porto Alegre: Artmed.

Demo, G., Nunes, I., Mendes, N. M. D., Ferreira, L. A., & Melo, B. B. (2011). Políticas de gestão de pessoas: cenário dos estudos publicados nos periódicos da área de Administração. *Revista Organizações em Contexto (Online)*, *7*(14), 57-84.

Dirks, K. T., & Ferrin, D. L. (2001). The Role of Trust in Organizational Settings. *Organization Science*, *12*(4), 450-467.

Estivalete, V. de F. B., Costa, V. F., & Andrade, T. de (2014). Organizational Citizenship Behavior: a Comparative Study between Brazilian and International Scientific Output from 2002 to 2012. *Business and Management Review*, *4*(3), 427-441.

Evans, W. R., & Davis, W. D. (2005). High-performance work systems and organizational performance: The mediating role of internal social structure. *Journal of Management*, *31*(5), 758-775.

Field, A. (2018). *Descobrindo a estatística usando o SPSS*. Porto Alegre: Artmed.

Fredrickson, B. L. (2001). The role of positive emotions in positive psychology: The broaden-and-build theory of positive emotions. *American Psychologist*, *56*(3), 218-226.

Gomide, S., Júnior, Vieira, L. E., & Oliveira, Á. D. F. (2016). Percepção de virtudes morais organizacionais: evidências de validade de um instrumento de medida para o contexto brasileiro. *Revista Psicologia Organizações e Trabalho*, *16*(3), 298-307.

Hair, J. F., Babin, B. J., Anderson, R. E., & Black, W. C. (2018). *Multivariate Data Analysis* (8a ed.). Cengage, UK.

Hamrahi, M., Najafbagy, R., Musakhani, M., Daneshfard, K., & Delavar, A. (2015). Factor effecting on promoting organizational virtuousness in Iran state agencies. *Indian Journal of Fundamental and Applied Sciences*, *5*(1), 4772-4779.

Hofstede, G. (2001). *Culture's Consequences: Comparing Values, Behaviors, Institutions, and Organizations Across Nations* (2a ed.). Sage, Thousand Oaks, CA.

Husin, S., Chelladurai, P., & Musa, G. (2012). HRM Practices, Organizational Citizenship Behaviors, and Perceived Service Quality in Golf Courses. *Journal of Sport Management*, *26*(2), 143-158.

Jain, S., & Jain, R. (2014). Organizational Citizenship Behavior & HRM Practices in Indian Banks. *Indian Journal of Industrial Relations, 50(2),* 257-269.

Janssen, O., & Huang, X. (2008). Us and me: team identification and individual differentiation as complementary drivers of team members' citizenship and creative behaviors. *Journal of Management*, *34*(1), 69-88.

Kline, R. B. (2015). Principles and practice of structural equation modeling. Guilford publications. Korean management consulting industry. *The International Journal of Human Resource Management, 23*(1), 126-146.

Kooshki, A. S., & Zeinabadi, H. (2016). The role of organizational virtuousness in organizational citizenship behavior of teachers: The test of direct and indirect effect through job satisfaction mediating. *International Review*, (1-2), 7-21.

Lam, W., Chen, Z., & Takeuchi, N. (2009). Perceived human resource management practices and intention to leave of employees: the mediating role of organizational citizenship behavior in a Sino-Japanese joint venture. *The International Journal of Human Resource Management, 20*(11), 2250-2270.

Legge, K. (2006). Human resource management. In Ackroyd, S., Batt, R., Thompson, & P., Tolbert, P. (Eds.). *The Oxford handbook of work and organization*. Oxford, UK: Oxford University Press.

Lengnick-Hall, C. A., Beck, T. E., & Lengnick-Hall, M. L. (2011). Developing a capacity for organizational resilience through strategic human resource management. *Human Resource Management Review*, *21*(3), 243-255.

Lockhart, P., Shahani, N. K., & Bhanugopan, R. (2020). Do organisational culture and national culture mediate the relationship between high-performance human resource management practices and organisational citizenship behaviour? *International Journal of Manpower, ahead-of-print*(ahead-of-print).

Luo, X., & Chen, W., (2010). The concept and realization of organizational virtuousness. Anais da Conferência *Internacional em Gestão da Ciência e Engenharia de Gestão*, Chungli, Taiwan, 4.

Magnier-Watanabe, R., Uchida, T., Orsini, P., & Benton, C. F. (2020). Organizational virtuousness, subjective well-being, and job performance. *Asia-Pacific Journal of Business Administration, 12*(2), 115-138.

Malhotra, N. K. (2012). *Pesquisa de marketing* (6a ed.). Porto Alegre: Bookman.

Malik, S. Z., & Naeem, R. (2016). Organizational Virtuousness, Perceived Organizational Support and Organizational Citizenship Behavior: A Mediation Framework. *Journal of Behavioural Sciences*, *26*(1), 113-130.

Marôco, J. (2010). *Análise de equações estruturais: Fundamentos teóricos, software & aplicações*. Pêro Pinheiro: Report Number.

Medeiros, J., & Demo, G. (2021). Attributes of a Relationship Management Model for the Public Sector (CiRS Exec). *Brazilian Business Review*, *18*(1), 101-117.

Moore, G., & Beadle, R. (2006). In search of organizational virtue in business: Agents, goods, practices, institutions and environments. *Organization Studies, 27*(3), 369-389.

Muhammad, A. H. (2014). *Perceived Organizational Support and Organizational Citizenship Behavior: The Case of Kuwait. International Journal of Business Administration, 5*(3), 59-72.

Myers, R. H. (1990). *Classical and modern regression with applications*. Boston: PWS-KENT, 368-423.

Nusrat, F. (2018). Stimulation of Efficient Employee Performance through Human Resource Management Practices: A Study on the Health Care Sector of Bangladesh. *International Journal of Business and Social Research*, *8*(1), 1-18.

Organ, D. W. (1988). *Organizational Citizenship Behavior: The good soldier syndrome.* Lexington, MA: Lexington Books.

Organ, D. W. (2018). Organizational Citizenship Behavior: Recent Trends and Developments Annual Review of Organizational Psychology and Organizational Behavior. A*nnual Review of Organizational Psychology and Organizational Behavior*, *5*(1), 295-306.

Peterson, C., & Park, N. (2006). Character strengths in organizations. *Journal of Organizational Behavior: The International Journal of Industrial, Occupational and Organizational Psychology and Behavior*, *27*(8), 1149-1154.

Pires, M. L., & Nunes, F. (2018). The mediating role of virtuousness in human resource management and job outcomes. *Revista de Administração de Empresas, 58*(4), 380-392.

Podsakoff, P. M., MacKenzie, S. B., & Podsakoff, N. P. (2012). Sources of Method Bias in Social Science Research and Recommendations on How to Control It. *Annual Review of Psychology, 63*(1), 539-569.

Ribeiro, A. C. A., Mattos, B. M., Antonelli, C. S., Canêo, L. C., & Goulart, E., Jr. (2011). Resiliência no trabalho contemporâneo: promoção e/ou desgaste da saúde mental. *Psicologia em Estudo*, *16*(4), 623-633.

Ribeiro, N., & Rego, A. (2009). Does perceived organizational virtuousness explain organizational citizenship behaviors? *Anais da Conferência Investigação e Intervenção em Recursos Humanos*, Paris, França, 1.

Ribeiro, N., & Rego, A. (2010). Como as percepções de virtuosidade organizacional explicam o empenhamento e os comportamentos de cidadania organizacional. *Anais do Simpósio Nacional de Investigação em Psicologia*, Minho, Portugal, 7.

Rodriguez, J. K., & Gomez, C. F. (2009). HRM in Chile: the impact of organizational culture. *Employee Relations, 31*(3), 276-294.

Salanova, M., Llorens, S., & Martínez, I. M. (2016). Aportaciones desde la Psicología Organizacional Positiva para desarrollar organizaciones saludables y resilientes. *Papeles del Psicologo*, *37*(3), 177-184.

Singh, S., David, R., & Mikkilineni, S. (2018). Organizational virtuousness and work engagement: Mediating role of happiness in India. *Advances in Developing Human Resources, 20*(1), 88-102.

Siqueira, M. M. M. (1995). *Antecedentes de comportamentos de cidadania organizacional: a análise de um modelo pós-cognitivo*. Tese de Doutorado. Universidade de Brasília, Brasília, DF, Brasil.

Siqueira, M. M. M. (2003). Proposição e análise de um modelo para comportamentos de cidadania organizacional. *Revista de Administração Contemporânea*, *7*(Edição Especial), 165-184.

Snape, E., & Redman, T. (2010). HRM practices, organizational citizenship behaviour, and performance: A multi-level analysis. *Journal of Management Studies*, *47*(7), 1219-1247.

Subramaniam, C., Shamsudin, F. M., & Ibrahim, H. (2011). Linking human resource practices and organisational performance: Evidence from small and medium organisations in Malaysia. *Journal Pengurusan, 23*(2011), 27-37.

Sun, H. J., & Yoon, H. H. (2020). Linking Organizational Virtuousness, Engagement, and Organizational Citizenship Behavior: The Moderating Role of Individual and Organizational Factors. *Journal of Hospitality & Tourism Research, ahead-of-print*(ahead-of-print).

Sylvia, D. H. E. (2014). Reward systems promote high-performance work teams achieving library mission. *The Bottom Line: Managing Library Finances, 27*(2), 66-69.

Tabachnick, B. G., & Fidell, L. S. (2013). *Using multivariate statistics* (6a ed.). San Francisco, CA: Allyn and Bacon.

Tang, T. W., & Tang, Y. Y. (2012). Promoting service-oriented organizational citizenship behaviors in hotels: The role of high-performance human resource practices and organizational social climates. *International Journal of Hospitality Management*, *31*(3), 885-895.

Tinti, J. A., Venelli-Costa, L., Vieira, A. M., & Cappellozza, A. (2017). The impact of human resources policies and practices on organizational citizenship behaviors. *BBR. Brazilian Business Review*, *14*(6), 636-653.

Van der Wal, Z. (2016). Small Countries, Big Performers: In Search of Shared Strategic Public Sector HRM Practices in Successful Small Countries. *International Journal of Public Administration, 40(5), 1-16.*

Yuvaraj, S., & Mulugeta, K. (2013). Analysis of the strategic orientation of HRD practices and managers' awareness towards the concepts of HRD in Ethiopia. *Research Journal Social Science and Management*, *3*(1), 186-198.